Sea Lanes, 299 Madeira Drive, Brighton, East Sussex, BN2 1EN

Construction and Environmental Management Plan

Project start date 1st November 2021

Project completion date 12th August 2022

Construction Manager: Tony Taylor

Tel: 07834 766302

Site Logistics, Traffic Management, Environmental and Methodology

Site Layout

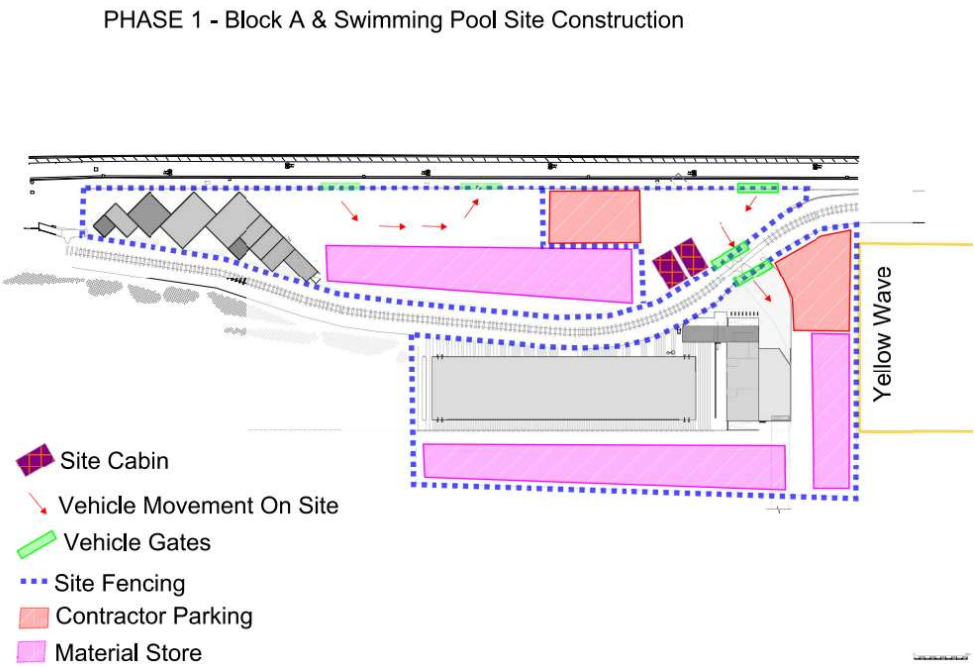

Site Access

Access to the works area for vehicles is proposed through two separate vehicular access gates formed within the Heras fencing to the front of the site and accessed directly from Madeira Drive. By having two vehicular access gates it will allow deliveries to enter the site via the western gate, and exit vie the eastern gate. This negates the need for vehicles to be reversed or to turn within the site making it safer for the local public and people working within the site area. A separate pedestrian gate will also be installed to the Heras fencing in Madeira Drive, this will ensure safe access and egress for all pedestrians working at or visiting the project whilst restricting unauthorised access to members of the public.

The access gates will always remain closed unless deliveries are being carried out, this will ensure safe segregation for the general public throughout the project. This will be managed by our certified Traffic Marshal whose mobile telephone number will be displayed on the front gates.

Keeping everyone informed.

Close neighbourhood relationships will be built with local residents and businesses, so they are informed of all site activities and programme. A public consultation will be carried out before works commence on site, with invitations sent to local residents, businesses, elected members and public transport operators where details of the project, programme, and clear lines of communication with senior members of the project team will be discussed.

Complaints can be highlighted directly to the site team, via the Sea Lanes website, or via the Considerate Constructors Scheme to which the project will be registered with. Communication with residents, local businesses, elected members and public transport operators will be continued throughout the construction period informing them of the key details of the project, deliveries and progress via monthly letter drops.

The impact of site traffic upon Madeira Drive will be kept to a minimum. We will implement a number of management processes to improve conditions on local traffic routes; these are explained in more detail later.

Our Traffic Marshal will be equipped with a jet wash and be located at the vehicular exit area within the site compound, this will wash all vehicle tyres that have deviated from any hard standing. There is an existing section of hardstanding that we will keep for as long as possible. A catchpit and sump will be formed adjacent to the exit of the site compound, this will catch any surplus mud and water arising from wheel washing and prevent contamination into the local drainage system and Madeira Drive.

Site Welfare

The site welfare facilities have been indicated on the plan above with a blue star. These comprise of a site office, a canteen, a meeting room, a drying room and toilet facilities, this provides adequate facilities to comply with the current CDM regulations.

Safety and directional signage will be installed to clearly detail the location of all these facilities. All workers and visitors are to report to the site managers office, sign in and have an induction before entering the main works area.

Contractor Parking

All construction parking will be made available on site. Contractors will be encouraged to use public transport and van share. No parking will be allowed on any public highway area of Madeira Drive and neighbouring roads.

Prior to any works commencing and before the site compound is set up, a detailed road conditions survey will be carried out jointly with a member of Brighton and Hove City Council member, and a senior member of the project team.

Local Accident and Emergency Department

In case of a medical emergency, the site manager is to apply first aid where possible or call 999 and request an emergency ambulance. The local Accident and Emergency department is located at The Royal Sussex County Hospital, Eastern Rd, Brighton BN2 5BE. A map is below detailing the quickest route to the hospitals A and E dpartment.

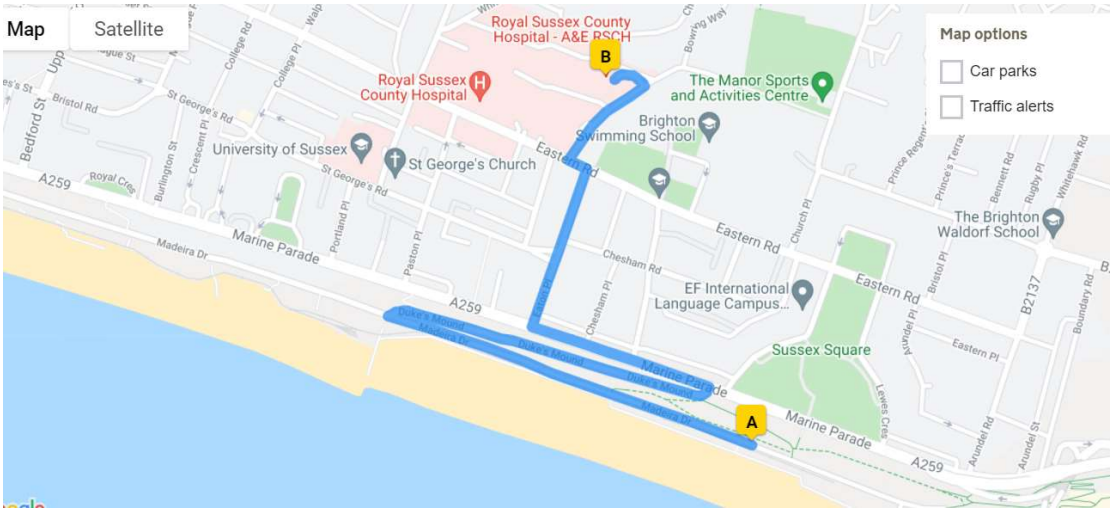

Site deliveries

Getting to the site

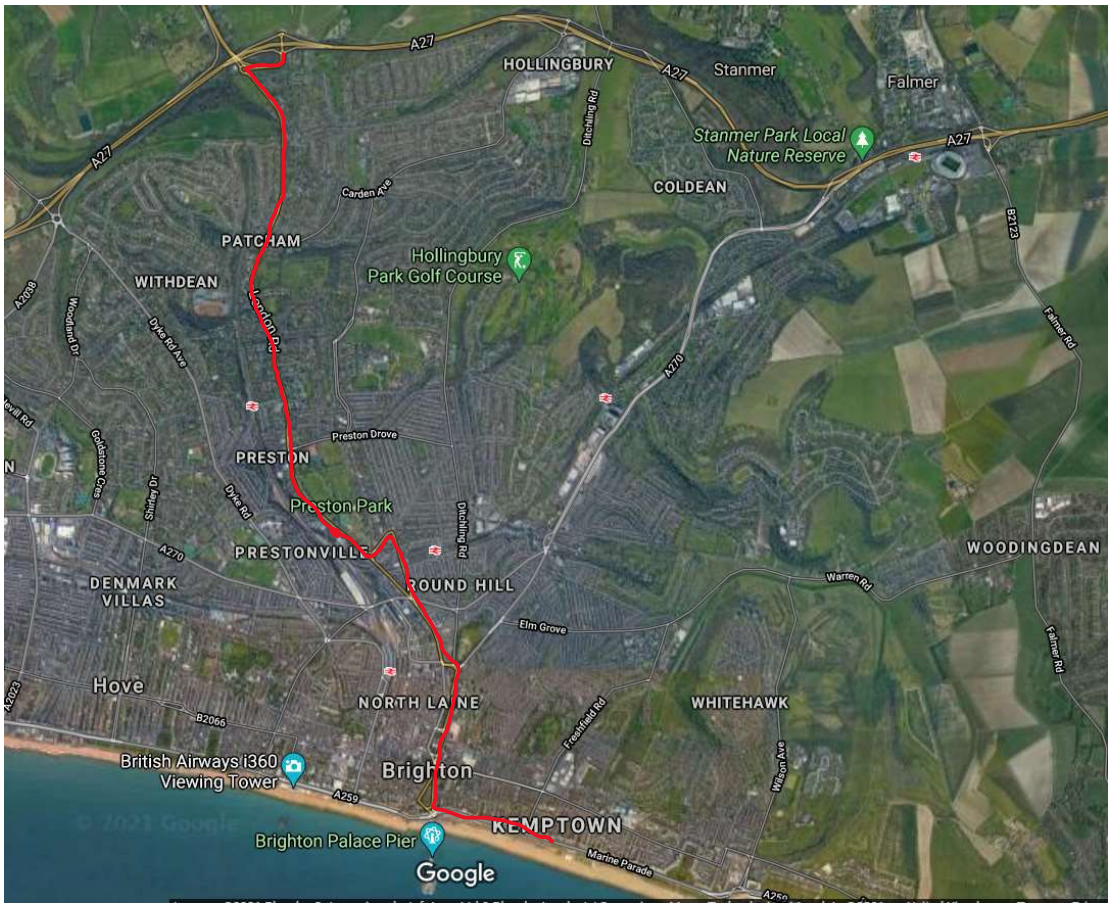

Deliveries will generally make their way to the site location, leaving the A27 at the Brighton exit heading towards Brighton on the A23, London Road. The London Road will then lead itself onto Preston Road and traffic will follow the one-way system via St Peters Place and Richmond Place, and then onto Grand Parade. Grand Parade leads onto Pavilion Parade where deliveries can turn left at the seafront onto Madeira Drive where signage will be installed clearly identifying the vehicular access into the works location.

We will operate a 'just in time' delivery procedure and all deliveries are planned and booked in advance. By booking deliveries in advance, it gives our site team the opportunity to cancel or prioritise deliveries should the schedule look too busy. Our aim is to keep local highways uncongested.

There will always be occasion where an unannounced delivery arrives, often on a smaller courier type basis – these will be accepted only if the delivery can be off loaded within the site compound area or turned away if this is not available.

Vehicle idling or standing at or adjacent to the site is not acceptable either before the site is open in the morning, or at any time during site opening hours. Our delivery protocol is explained at every Pre-let meeting and reinforced during the construction period at Site Inductions and periodic Toolbox Talks. Parking on the adjacent highways for staff, operatives and subcontractors is not allowed, this will form part of all orders and discussed during each of the pre-order meetings.

There will be certain periods where an increased period of site deliveries / traffic will be experienced. Examples of this are during the reduced level dig for both the freshwater pool and the foundations for the retail units, infrastructure, and the installation of the SIPS panels (Structural Insulated Panels). These periods will be highlighted to our/your neighbours through our monthly newsletter and by local signage being displayed and scheduled at least seven days in advance.

Deliveries will be planned to avoid peak periods, including school pick up and drop off times.

All road hauliers and construction vehicle operators are accredited to Bronze standard (or greater) of the Freight Operator Recognition Scheme

Site delivery plan

Minimising disruption to local residents and road users

- A certified Traffic Marshal will manage all deliveries to avoid disruption to users of Madeira Drive.
- Smaller vehicles are to be used and larger deliveries split into smaller loads to avoid disruption to local residents and businesses.
- Larger deliveries are to be carefully planned / scheduled and communicated to local residents and businesses.
- The design has been carried out to minimise waste and reduce the number of deliveries required on the project, hence reducing traffic movement.
- Car sharing is to be promoted to minimise vehicle movement and reduce carbon emissions

Traffic Management Plan and Construction Phasing

PHASE 1 - Block A & Swimming Pool Site Construction

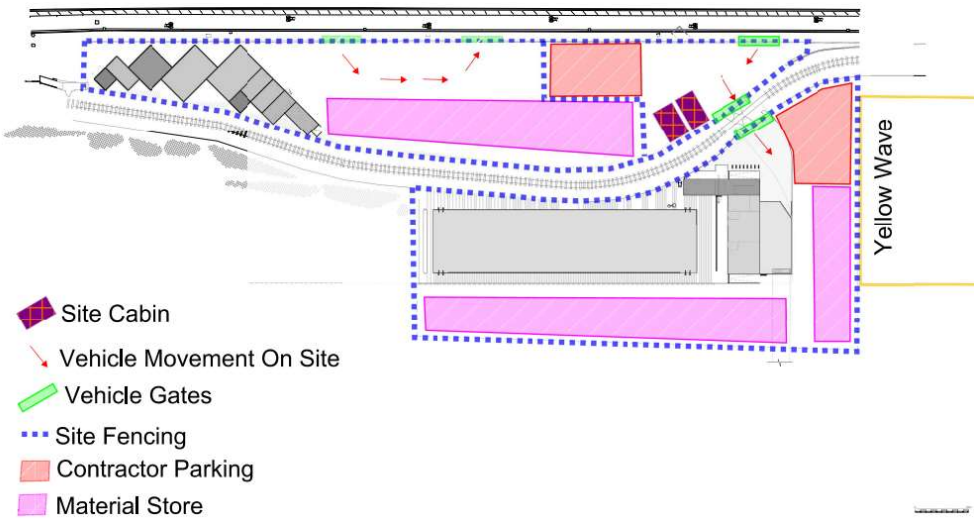

The above traffic management plan details three vehicular access gates leading onto the development from Madeira Drive. Warning signage will be installed at either end of the Sea Lanes development. This is to highlight and warn pedestrians, cyclists, and all other road users that there is vehicular access and egress into the site compound area. Our certified Traffic Marshal will manage all vehicular access into and out of the site area.

We will apply for and install two temporary crossovers over the existing footpath and cycle lane to allow site traffic to pass into the vehicular access gates to the front of the development. There is an existing crossover installed which will allow access to the rear of the development.

Access into the front area of the site is via a heras gate situated to the western side of the site. Vehicles will enter the site using this entrance, unload / deliver what is required, then exit the site via the heras gate to the eastern side of the site compound. This allows all deliveries to safely enter and leave the site without the need for any reversing manoeuvres.

Before any delivery leaves the site area, our Traffic Marshal will ensure that the wheels of each of the vehicles is free from any spoil arisings and debris to avoid contamination of Madeira Drive and any surrounding roads.

Excess water and spoil will be collected within the sump / catchpit installed at each access / egress gate to the site.

When access is required to the rear of the site (the swimming pool complex), vehicles will enter via the crossing from Madeira Drive (highlighted as maintain access) and drive towards the heras vehicular access gate highlighted on the plan above managed by our Traffic Marshal. Deliveries / muck away lorries will unload / be loaded within the site compound area, turn within this space, and exit via the same access. Again, this can be done without any reversing outside the compound area.

There is minimal enabling works to be carried out. There is a small area of concrete hardstanding that is to be broken up and removed. This and all muck away lorries will strictly follow our proposals detailed above to ensure all local pedestrians, cyclist and other road users are protected.

There are no parking bays directly adjacent to the site area, therefore there is no need for any temporary parking bay suspensions.

All craneage will be carried out withing the site compound area, therefore no temporary road closures are required.

There is to be new gas and water statutory connections made as part of the construction works, we are currently in discussions with Southern Water and UK Power Networks to agree the full scope, timescales and any temporary orders / temporary traffic management required for these installations. Once agreed, we will liaise with Brighton and Hove Highways department to ensure that our proposals are agreeable.

Phasing

PHASE 1 - Block A & Swimming Pool Site Construction

To enable our traffic management plan to work correctly, the project has been split into four phases.

Phase 1 is the construction of block A and the swimming pool area as above. This allows us to contain all vehicle movements within the site area whilst accommodating parking for all staff and contractors

PHASE 2 - Block B & Swimming Pool Site Construction

Phase 2 is construction of block B and to continue with the construction of the swimming pool. Again this allows to contain all vehicle movements within the site area, and accommodate parking for all staff and contractors.

PHASE 3 - Block C & Swimming Pool Site Construction

Phase three is the construction of block C whilst continuing with the construction of the swimming pool area. Again, this allows us to contain all vehicle movements within the site area, and accommodate parking for all staff and contractors.

PHASE 4 - External Works

Phase 4 is the external hard and soft landscaping. All staff and contractor parking is available on site.

Types of vehicle used during construction at Sea Lanes.

Muck away and delivery of aggregate materials will utilise both tipper and grab 8 wheeled lorries as below.

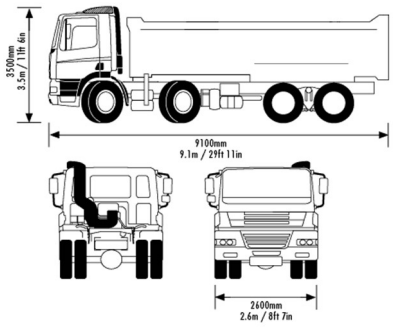

Concrete Lorries will be as below delivering a 6yrd load at each drop

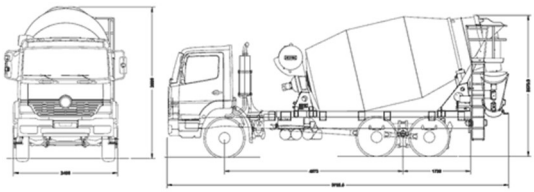

SIPS Panels and items with longer or larger deliveries will be delivered on flat bed lorries as below.

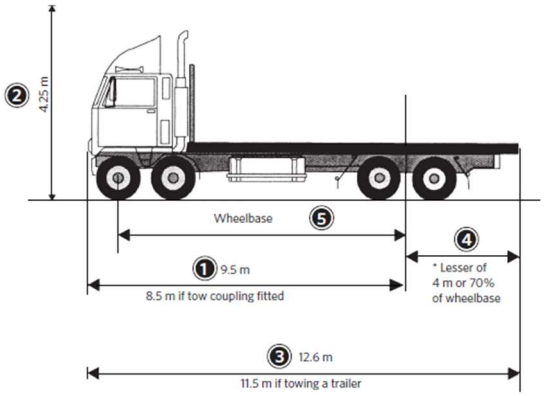

Skip Lorries will be as below

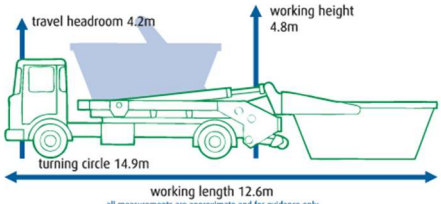

all measurements are approximate and for guidance only

Container Sizes Available
Standard Skips

4 cubic yards (3.06m³)	Length	2.05m	6ft9ins
	Width	1.56m	5ft2ins
	Height	1.22m	4ft
6 cubic yards (4.60m³)	Length	3.48m	11ft5ins
	Width	1.80m	5ft10ins
	Height	1.01m	3ft4ins
8 cubic yards (6.12m³)	Length	3.60m	11ft10ins
	Width	1.80m	5ft10ins
	Height	1.22m	4ft
12 cubic yards (9.20m³)	Length	3.70m	12ft2ins
	Width	1.80m	5ft10ins
	Height	1.53m	5ft10ins

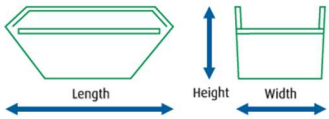

All delivery vehicles will be directed into the site areas via Madeira Drive as efficiently as possible. Particular attention will be made to ensuring larger deliveries or increased traffic movement are scheduled a minimum of seven days in advance to ensure that the surrounding roads are not blocked by construction traffic.

A street condition survey will be carried out by way of photographs, this is to be agreed with East Sussex's Highways Authority before works commencing.

Considerate Constructors Scheme

The project at Sea Lanes will be registered with the Considerate Constructors Scheme. This will ensure that there are clear details how the project team will minimise, record and respond to complaints from neighbours regarding issues such as noise, dust management, vibration, site traffic, idling vehicles, parking by staff and contractors and deliveries to and from the site.

Materials storage and movement

Material and plant will be stored within the site boundary and compound areas. We will also allocate areas within the site demise for subcontractors, so they have a secure area to store their materials as detailed on the site layout plan above, ensuring general work spaces are kept clear. Clear signage will be used to direct all traffic movement.

Vertical movement will be managed by the use of a forklift and appropriately placed loading bays around the building. Mobile cranes will be used to load out and position the SIPS panels as required.

Waste removal

Skips will be stored within the compound areas.

6 or 8 yard skips for the rubble arising and general waste and timber.
Waste is segregated at source and removed in large skips and Lorries.

Spoil will be removed using Lorries and via the access points detailed on the site layout plan. These vehicle movements will be managed by our certified Traffic Marshal.

We use waste transfer contractors who have their own segregating facilities off site. This enables us to achieve our Site Waste Management and Environmental targets on sites where we do not have the space to efficiently segregate all our waste.

Safety advisors

The site will be visited by Paul Sewell of Enigma Health and Safety on a regular basis. The safety advisor will monitor the implementation of statutory provisions and will file an action report with the Site Manager and provide copies to the Contracts Manager.

Communication and co-ordination

Pre-commencement meetings will be held with subcontractors prior to them starting work on site. Safety will be an agenda item in all progress meetings and when necessary separate safety meetings will be convened. A copy of the H&S plan will be available for reference for all contractors on the site. Method statements will be made available to all supervisors and operatives who require them.

Plant and lifting appliances.

Sub-contractors will be required to ensure that all items of plant, cranes or lifting appliances are in good order and that any statutory required tests and examinations have been conducted within the requisite period and that current test certificates are available on site for inspection. No crane will be allowed to commence work until the crane arrival checks have been carried out and permission to work granted.

Scaffolding and tower scaffolds

Scaffolds and tower scaffolds for use on the contract will be erected in accordance with the code of practise issued by the National Access and Scaffolding Confederation (NASC).

Excavations

Before commencing any excavation, contractors will be required to take all necessary steps to ascertain the presence of underground services and make arrangements to ensure they present no safety hazard to his operatives or sub-contractors. Because of obvious safety problems on the site, contractors will be required to ensure that no excavation is left exposed at any time without suitable and proper means of support and in addition, that site traffic and personnel are advised by prominent visual warning signs and barriers to restrict them to authorised routes.

Particular care will be taken during excavations and all other operations to ensure that adjacent properties or boundaries are not damaged in any way.

Safety equipment/ protective clothing

The whole of the project will be designated as a hard hat area. Sub-contractors will be required to provide their operatives with helmets and ensure that they are worn. Operatives who refuse to comply with this requirement will be removed from the site. In addition, sub-contractors will ensure that their employees and those of their sub-contractors are provided with all other safety equipment, harnesses, goggles, masks and the like, clothing, suitable footwear etc., and to ensure its full and proper use.

Fire protection / emergency procedures

Evacuation procedures will be designed and communicated to all people on the project. In particular, adequate fire points will be provided to protect the structure during the course of construction.

Noise

Sub-contractors will be required to ensure that provisions made under the noise regulations are complied with and that suitable noise assessments are conducted by competent persons. Adequate records of assessments and hearing protection measures deemed necessary are to be maintained on site. Site / activity specific RAMS will be sought for all works, these are to include protection from Noisy operations.

Eliminating noisy processes or substituting them for a less noisy process are the best ways of dealing with noise on a construction site. If this is not possible removing people from the noisy area and choosing quieter equipment can also be effective. As a last resort, hearing protection and hearing protection zones may be appropriate.

Here are some examples of how we will reduce noise:

- Eliminate noise during design. For example, design ducts into a structure rather than chasing channels in walls.
- Substitute a less noisy process. For example, use a hydraulic block splitter rather than a cut-off saw to cut blocks.
- Remove people from the vicinity of noisy work. For example, use a machine mounted breaker on an excavator with a good quality cab and exclude other people from the area while the breaker is in use.
- Select quiet equipment. For example, compare noise levels from power tools when buying or hiring equipment. Use information from the manufacturer or supplier and choose the quietest tools that are effective for the job. You can also reduce noise when selecting other types of tool. For example, choose plastic or rubber hammers, rather than metal, to free collars on falsework legs.

Control of substances hazardous to health

To ensure that the requirements of the COSHH regulations are being met, subcontractors will be required to produce copies of hazard assessments made and the measures they will undertake for the control of any substance hazardous to health, which is intended for use on the works.

Electricity

Temporary electric supplies, which are intended to power handheld or portable equipment will be 110 volt centrally tapped to earth. Where other special equipment requires a higher voltage, the approval of the site management team will need to be obtained.

Electric supplies to temporary site accommodation may be 240 volt. All electric supplies will be installed in strict accordance with the electricity at work regulations and tested in accordance with the current i.e. wiring regulations.

All portable electrical appliances will also be PAT tested and marked accordingly to ensure electrical safety.

Accidents

Subcontractors will be required to have formal arrangements for the reporting, recording and investigation of accidents and dangerous occurrences. All accidents on site will be reported to the site office and recorded.

Manual handling

Mechanical handling will be used where possible, but manual handling may remain an issue in some instances due to the location and nature of the works. Proposals will be provided for handling plant and components.

Tripping

The nature of the work is such that risks of tripping may occur. Careful consideration will be given throughout the works to minimise this risk, including keeping the site tidy, and defining routes, etc.

Hot work

Hot work permits will be issued for all hot works, trained staff used, and existing structures be protected. Fire extinguishers will be always available. Ventilation arrangements will be made for smoke disposal.

The control of dust

Site specific / activity RAMS (Risk Assessments / Method Statements) will be sought from every subcontractor and approved by the Site Manager before any works can commence. The control of dust will form part of the RAMS and will need to satisfy the guidance CIS36 from the HSE.

The RAMS will be read / understood and adhered to by all operatives carrying out the works. Regular review of the methods and activities will be carried out to ensure that any minor changes are captured on the RAMS.

When working with potentially dusty operations, the RAMS must:

- Assess the risks
- Control the risks
- Review the controls

When working within confined areas, water suppression attached to pieces of plant will reduce the amount of dust generated. Well ventilated areas including mechanical

ventilation will be used when cutting / breaking out areas of concrete. These activities will all be covered in detail within the approved RAMS.

Correct and adequate RPE will be worn by operatives following the mandatory face fit test, to ensure that each piece of RPE is fitting correctly and therefore adequate.

The table below details some of the more common high-risk activities that are usually found during construction works, many of these will be evident during the construction of Sea Lanes.

Task	Eliminate or limit the dust by:	Control the dust by using:
Cutting concrete kerbs, blocks and paving with a cut-off saw	■ Limiting the number of cuts during design/layout ■ Using lower energy equipment like block splitters ■ Getting material cut off site and delivered	■ Water suppression and ■ RPE* with an APF of 20
Chasing concrete and raking mortar	■ Limiting the need for chasing at the design/layout stage ■ Using a work method that limits/does not need chasing, like over-covering cables	■ On-tool extraction using an H or M Class extraction unit and ■ RPE* with an APF of 20 – consider powered RPE for longer duration work
Cutting roofing tiles with a cut-off saw	■ Hand cutting natural/fibre cement slates and other tiles where possible ■ Using ½ and 1½ tiles ■ Correct setting out/design ■ Minimising valleys/using dry valleys	■ Water suppression and ■ A dedicated cutting area with scaffold board protection and ■ RPE* with an APF of 20
Scabbling or grinding with hand-held tools	■ Specifying architectural finishes that do not need scabbling ■ Using (ultra) high-pressure water jetting ■ Using chemical retarders and pressure washing ■ Casting in proprietary joint formers, eg mesh formwork	■ Where possible use on-tool extraction using an H or M Class extraction unit and ■ RPE* with an APF of 20
Occasional short-duration drilling with hand-held rotary power tools	■ Limiting the number of holes during design/planning ■ Using direct fastening or screws	■ Where possible use equipment that stops dust getting into the air. The larger the holes the better this needs to be. Options range from: – drilling through a dust 'collector' or using cordless extraction attached to the drill (for smaller drill bits) or – on-tool extraction using an H or M Class extraction unit ■ Otherwise use RPE* with an APF of 20
Drilling holes with hand-held rotary power tools as a 'main activity'	■ Limiting the number of holes during design/planning ■ Using direct fastening or screws	■ Where possible on-tool extraction using an H or M Class extraction unit and ■ RPE* with an APF of 20
Dry coring	■ Limiting the number of holes during design/planning	■ On-tool extraction using an H or M Class extraction unit ■ Longer duration work will also need RPE.* Use an APF of 20
Wet coring	■ Limiting the number of holes during design/planning	■ Water suppression ■ Long periods of wet coring in enclosed spaces may also need RPE.* Use an APF of 20
Using a hand-held breaker in enclosed spaces with limited ventilation	■ Limiting the amount of breaking during design/planning stage ■ Bursting, crushing, cutting, sawing or other techniques ■ Remote controlled demolition	■ On-tool extraction using an H or M Class extraction unit and ■ RPE* with an APF of 20

Task	Eliminate or limit the dust by:	Control the dust by using:
Abrasive pressure blasting	■ Using a different method of work like (ultra) high-pressure water jetting ■ Using 'silica free' abrasive material	■ Wet or vacuum blasting and ■ RPE* will depend on silica content of building materials, blasting equipment and length of work: – In most instances use RPE with an APF of 40 – Use RPE with an APF of 20 for lower risk work (including the 'potman' nearby) ■ Shrouds or screens to contain the flying abrasive ■ Certain restricted/enclosed working places may also need general mechanical ventilation
Soft strip demolition	■ Carefully planning the work ■ Limiting the number of people that need to be in the work area ■ Screening off areas to prevent dust spreading	■ Use water suppression or on-tool extraction for those tasks where it is possible and ■ RPE* with an APF of 20 – consider powered RPE for longer duration work ■ Enclosed spaces may also need general mechanical ventilation to remove dusty air
Removing small rubble, dust and debris	■ Limiting waste materials during design/planning ■ Considering where waste material is created and how frequently it needs removing ■ Using the correct dust controls when making rubble/debris	■ Damping down and using a brush, shovel and bucket for minor/small 'one-off' amounts Or for regular removal/site cleaning: ■ Water spray for damping down ■ Rake, shovel and bucket/wheelbarrow to remove larger pieces ■ Covered chutes and skips where needed ■ Vacuum attachments fitted to an H or M Class extraction unit ■ RPE* with an APF of 20 depending upon location, duration and type of work
Cutting wood with power tools	■ Ordering pre-cut materials ■ Using dedicated cutting areas to minimise spread	■ On-tool extraction using an H or M Class extraction unit ■ RPE* with an APF of 20 in most situations
Sanding wood with power tools	■ Using 'pre-finished' materials	■ On-tool extraction using an H or M Class extraction unit and ■ RPE* with an APF of 20
Sanding plasterboard jointing	■ Using other finishes/systems ■ Select boards with tapered edges to limit finishing needed	■ On-tool extraction using an H, M, or L Class extraction unit

* **Table 2** Common RPE types for construction dust

APF	Common RPE types for construction dust
20	■ FFP3 disposable mask or half mask with P3 filter Or for longer duration work: ■ Powered RPE such as a TH2 powered hood/helmet
40	■ Abrasive blasting helmet with constant flow airline

Site Rules

- On arrival on site all personnel are to report to the site manager to be inducted and briefed on site rules, general work procedures, the site fire plan and also any particular daily hazards.
- Contractors must stay within the working area and not stray beyond unless with prior permission of the site manager other access is required.
- Fire access routes to be kept clear at all times.
- Smoking will only be permitted on the site within the designated smoking area within the site confines.
- All accessible openings to be secured before leaving site at the end of each working day.
- Attendance must be provided for the reversing of delivery vehicles.
- Delivery of materials must be avoided at the beginning and end of the day.
- No drugs or alcohol allowed on site.
- No radios to be used on site.
- No burning to be allowed on site.
- All electrical equipment to be 110 Volt.
- All operatives are to wear PPE appropriate to their activity.
- All parking will be as directed by the site manager.
- Ensure that you have a safe access to your place of work.
- Ensure your tools and equipment are correct for the job and in safe working order.
- Know the location of first aid and fire extinguishers.
- Obey all signs and notices.
- Keep the work area tidy.
- Understand what the work entails, risks involved and how to avoid them.
- No mechanical plant to be left unattended with engine or motor running to prevent unauthorised use.

- Always give way to working plant, as you can see them, but the drivers may not be able to see you.

- Always make sure the driver of any plant has seen you before approaching.

- Obtain permits to work for excavating, entering a confined space, hot works, connecting to gas or electricity, working on a roof.

Arrangements for selection and control of sub-contractors

If a contractor is to be used who is not on our selected contractors list, then arrangements need to be made to issue them with a pre-qualification questionnaire so that we can assure ourselves that they have the skill, knowledge, and experience to carry out the work in a way that secures health and safety, prior to their start on site.

These checks will include the provision of the following information, as a minimum:

- Health and safety policy.
- Insurance details.
- Management structure.
- Risk and COSHH assessments and site-specific method statements.
- Confirmation that they will comply with the health & safety plan.
- Up-to-date product literature as appropriate and as will be required for the CDM health and safety file.
- Confirmation that plant to be used is properly selected and maintained.
- Confirmation that plant/equipment operators are properly trained.
- Evidence of CSCS accreditation
- Training details
- Accident/incident/enforcement notices and court action details.

Environmental incident and emergency controls

Pollution prevention will be achieved by adequate training, by the provision of containment measures such as drip trays, absorbent mats or materials, drain covers for preventing impact on sewers or watercourses and by complying with safe working methods.
Adequate and appropriately placed spill kits will be provided for rapid incident response when and where prevention fails. Incidents and emergencies will be reported.

Actions in response to environmental incidents and emergencies will be communicated at inductions and task briefings. Spill response posters will be displayed on office and welfare facility notice boards.

Construction Methodology

Site Set Up

The welfare facilities will be installed on the clear vacant site as detailed on the enclosed site layout plan. The canteen, drying room, toilets, and site office will be located within the compound area.

Foundations & Sub-structure.

These will be installed as per the Structural Engineers requirements and inspected by East Sussex's Control team to satisfy building regulations. Traffic management will be carried out as detailed earlier within this plan.

Drainage

One of the first operations will be to excavate and install the drainage system for the natural pool.

The drainage scheme is of a standard design which will be installed in the correct sequence and inspected / signed off by East Sussex's Building Control team.

Incoming services

New incoming services will be installed and connected to the current infrastructure to the front of the development from Madeira Drive into the buildings.

Super structure:

Following the completion of the foundations the SIPS panels will be installed. Scaffold will be erected around each of the units to allow the finishes to be installed.

Scaffold will be erected by a competent contractor and inspected on a weekly basis to ensure we comply with the current CDM regulations.

Roof

The roof will be clad materials including green roofs utilising the scaffold.

Internal finishes

The internal finishes will follow a logical sequence.

Externals

Hard Landscaping
Soft Landscaping
Fencing

Project Directory

SeaLanes

Project Directory

Project Team				
Ross Gilbert	QED Property	Client	rossgilbert@qedproperty.com	07837 444343
Mark Uren	QED Property	Client	mark@qedproperty.com	07999 080588
Joe McNulty	Copsemill Properties	Client	joe@copsemill.co.uk	07770 846115
Robert Francis	RF Consultants	Project Manager	robert.francis@rfcc.co.uk	07947501362
Bruce Warren	Evolution Architects	Architect	office@evolutionarchitecture.co.uk	01273 608444
Neil Chaston	HOP	Structural Engineer	neilc@hop.uk.com	01273 608444
Catherine O'Reilly	Lizard Landscapes	Ecologist	lizard.ecology@btconnect.com	01903 216033
Mike Beesley	Freeman Beesley	M&E consultant	Mike.B@freemanbeesley.com	01273 77 86 76
Ian Pratt	Freeman Beesley	M&E consultant	Ian.P@freemanbeesley.com	01273 77 86 76
Stuart Strong	Brighton & Hove Council	Volks Railway	Stuart.Strong@brighton-hove.gov.uk	
Toni Manuel	Brighton & Hove Council	Seafront Development Manager	Toni.Manuel@brighton-hove.gov.uk	
Sygrave, Jonathan	South East Archaeology	Archaeologist	j.sygrave@ucl.ac.uk	
Clive Morton	Wrightfield Pools	Swimming pool manufacturer	cmorton@wrightfieldpools.co.uk	07739 162769
Peter louis	Sweco	Building Control	peter.louis@sweco.co.uk	01273 021 030
Tony Taylor	RF Consultants	Construction Manager	tony@ttconsultingsussex.com	07834 766302
TBC	UKPN	Electrical Connections	TBC	TBC
TBC	Southern Water	New Water supply	TBC	TBC
TBC	SGN	New gas connection	TBC	TBC

Version History

Revision reference	Date	Revision comments
Rev A	27-05-21	Initial submission
Rev B	13-07-21	Revised following comments from B&HCC Highways Department received 03-07-21
Rev C	17-08-21	Construction Phases revised